LINE	OVERHANG	SYM#3 PART NO.	SYM#4 PART NO.	SYM#12 PART NO.	WT. LBS
01	65 1/2	103373-03	103373-04	101283-02	319
02	73 3/4	103373-03	103373-04	101283-01	325

NOTES:

1. WELD ANGLE OF SYM#1 TO ANGLE OF SYM#2, PRIOR TO APPLICATION OF SYM#9.

BILL OF MATERIAL

SYM.	PART NO.	REQ.	DESCRIPTION	MATERIAL	WT. (LBS.)
1	96032-01	1	STANCHION & BELLCRANK S/A	SEE S/A	67.8
2	95726-01	1	GRATING BOX S/A	SEE S/A	149
3	TABLED	1	ANGLE EQUAL LEGS W/2 HOLES ONE LEG	A-36	~~~
4	TABLED	1	ANGLE EQUAL LEGS W/2 HOLES ONE LEG	A-36	~~~
5	100921-01	1	RESERVIOR SUPPORT, TWO HOLES	A-36	6.0
6	103374-01	1	ABDW VALVE SUPPORT	A-36	9.8
7	101707-01	1	SUPPORT BAR, CONTROL VALVE	A-36	17.34
8	16598-49	1	RECTANGULAR SHAPE	A-36	1.6
9	100534-38	1	RECTANGULAR SHAPE	A-36	6.45
10	20477-98	1	RECTANGULAR SHAPE W/HOLE	A-36	2.32
11	20928-57	1	ANGLE SHAPE W/ 1 HOLE	A-36	3.6
12	TABLED	1	RECTANGULAR SHAPE W/ CORNERS CHAMFERED	A-36	7.42

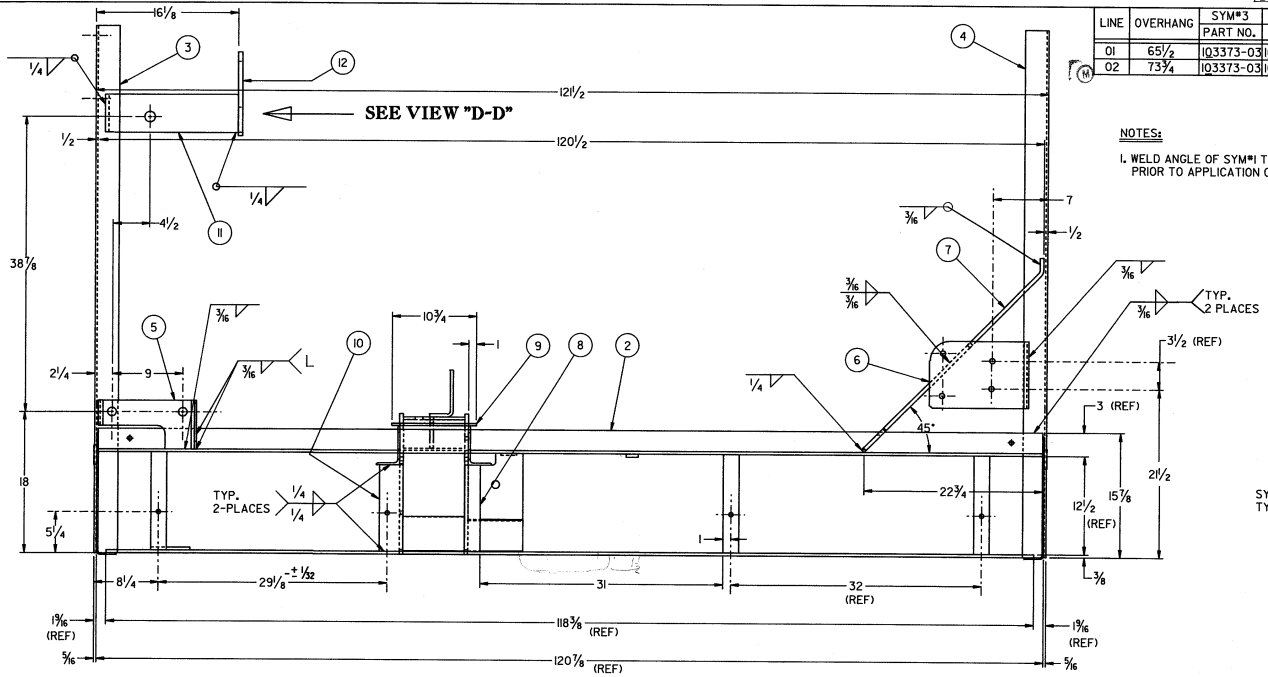

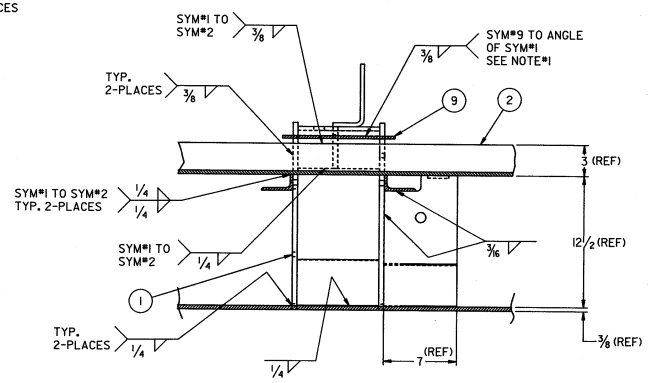

SECTION "B"-"B"

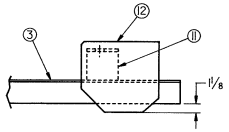

VIEW "D-D"

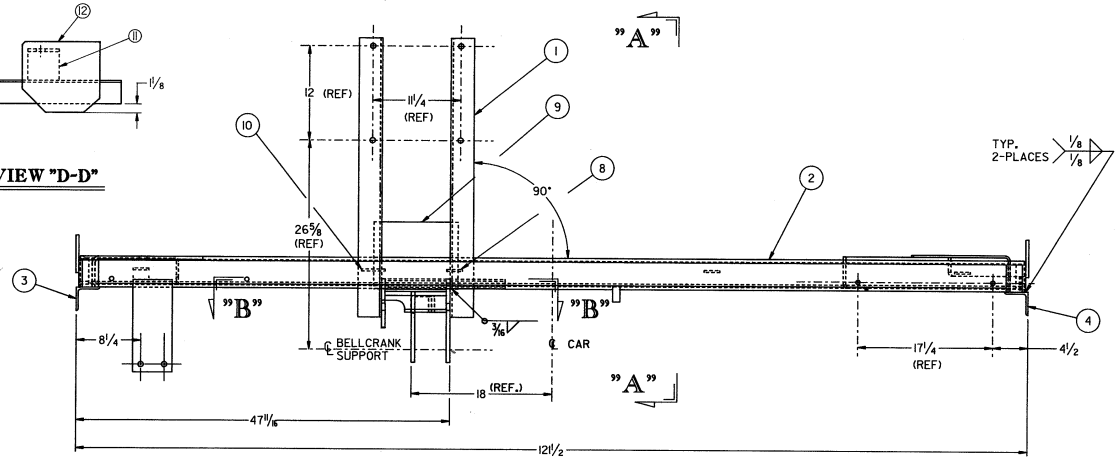

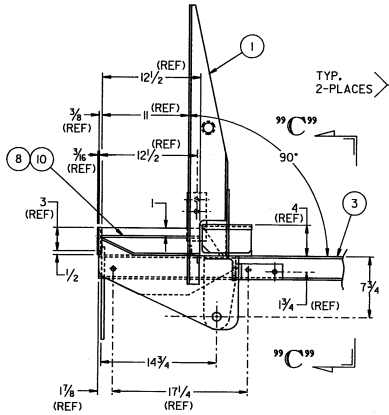

SECTION "A-A"

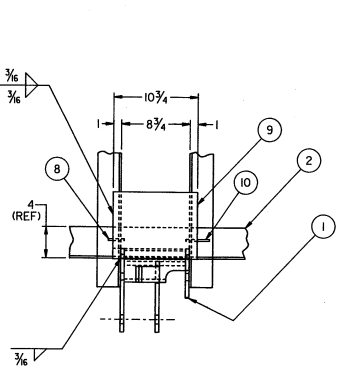

VIEW "C"-"C"

DEFAULT TOLERANCES — S/A DRAWINGS
ALL DIMENSIONS ARE INCHES UNLESS OTHERWISE NOTED
FRACTIONAL DIMENSIONS: ± 1/8
ANGULAR DIMENSIONS: ± 1°

REV	DATE	BY	DESCRIPTION	CHK
B	06.25.93	DesK	LINE 01. SYM. #3 & #4 PART No.s WERE 103373-01 & 103373-02, RESPECTIVELY.	
A	04.01.93	DesK	SYM. #1 PART No. WAS 95386-01.	M.G.

THIS DRAWING IS THE SOLE PROPERTY OF PROCOR LIMITED
IT IS NOT TO BE REPRODUCED OR COPIED OR DISSEMINATED TO OTHERS

PROCOR

PROCOR LIMITED
RAIL CAR DIVISION
2001 SPEERS RD.
OAKVILLE, ONTARIO
L6J 3G3

"B" END SILL S/A
TABLED OVERHANG
121 1/2" WIDE, 1" GRATING

DRAWN BY: M. GATTO DATE: 11.30.92
CHECKED BY: M. GATTO DATE: 11.30.92
APPROVED: R. BREZNIK DATE: 12.16.92
SCALE: 1/2"=1'-0"
WEIGHT: TABLED
DRAWING NO. 95721
REVISION B

FIRST USED WITH - 95720 REPRO. OF - 95754 SEQUENCE NO.- 5130