REF DWG: 5-U-4754

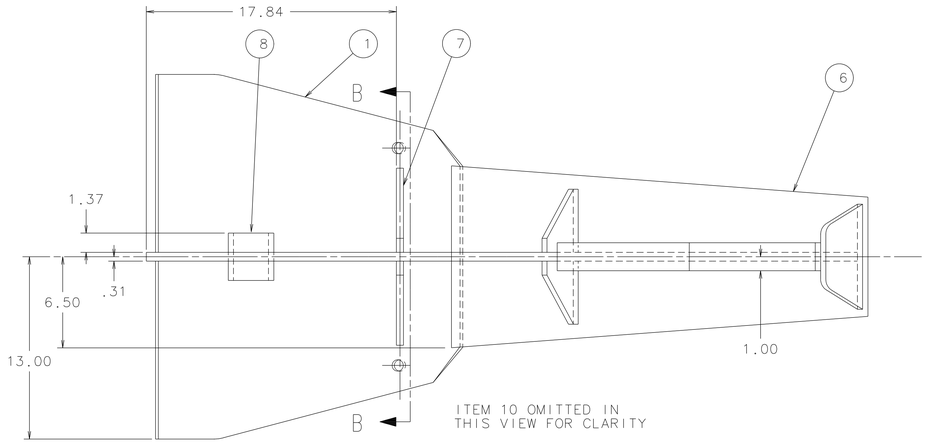

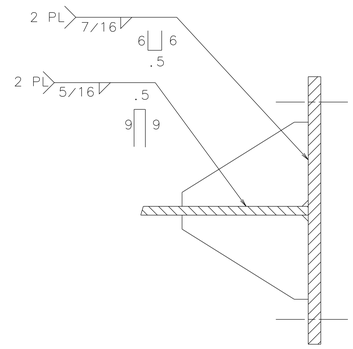

SECTION B-B

			01					
			1	1	4U242900	4-U-2429-00	COVER PLATE-BOLSTER BOTTOM	1
			-	1	4U704100	4-U-7041-00	WEB-BOLSTER	2
			1	-	4U704101	4-U-7041-01	WEB-BOLSTER	3
			1	1	2U704200	2-U-7042-00	WEB-BOLSTER TOP	4
			1	1	2U134300	2-U-1343-00	COVER PLATE-BOLSTER END	5
			1	1	3U243300	3-U-2433-00	COVER PLATE-OUTER BOLS BOT	6
			2	2	2K897000	2-K-8970-00	BRACE-SIDE BEARING	7
			-	1	2K001002	2-K-0010-02	SLEEVE-TRAINLINE	8
			2	2	2K542100	2-K-5421-00	GUSSET-BOLSTER WEB	9

NOTE:

1. UNLESS OTHERWISE SPECIFIED ALL WELDING IN ACCORDANCE WITH SWP 6325.

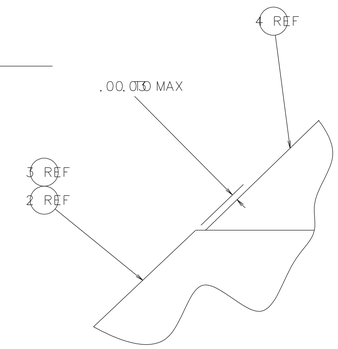

VIEW A

LINE NO.	PART NO.	DESCRIPTION
00	5U435400	WITH HOLES
01	5U435401	WITHOUT HOLES

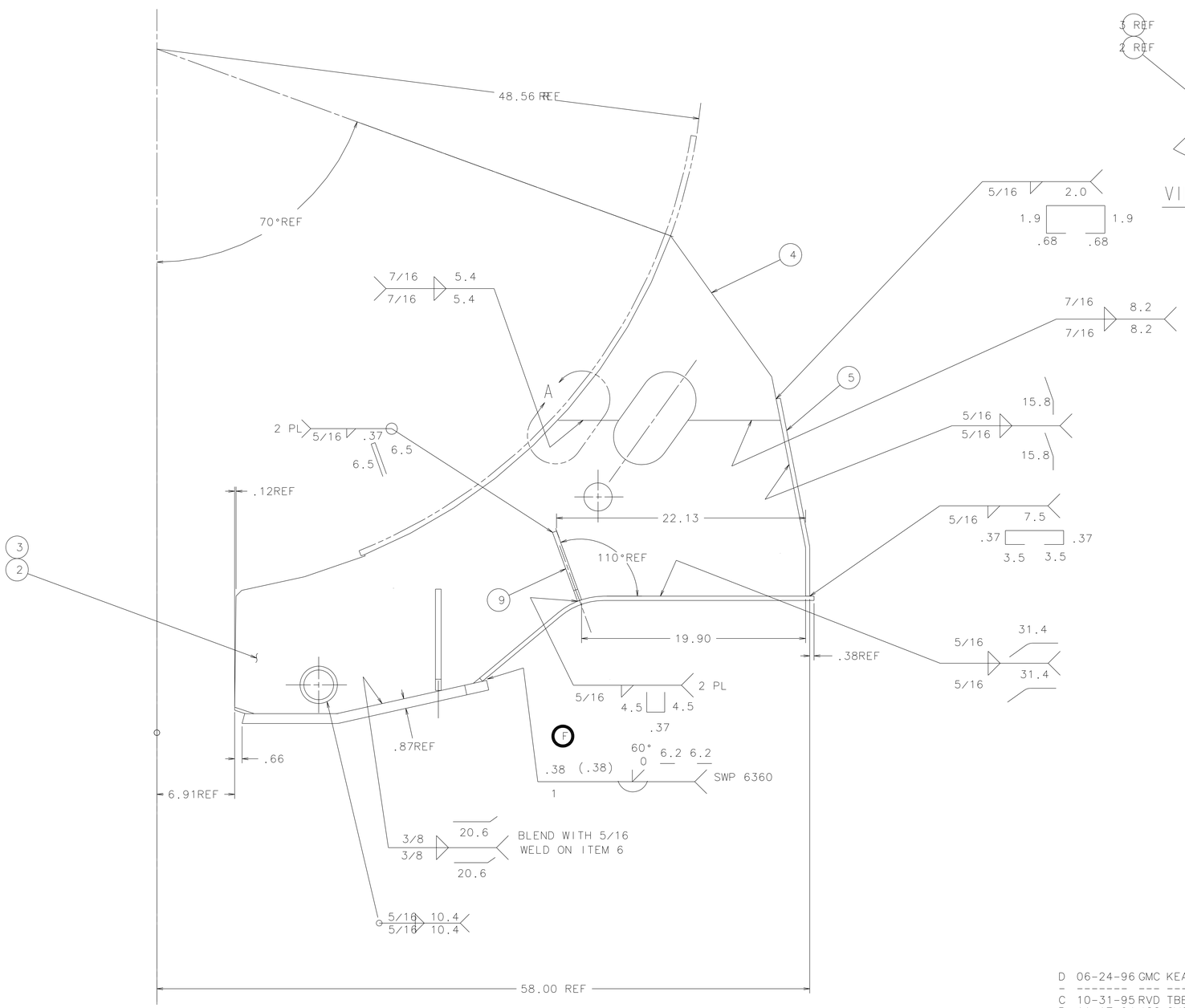

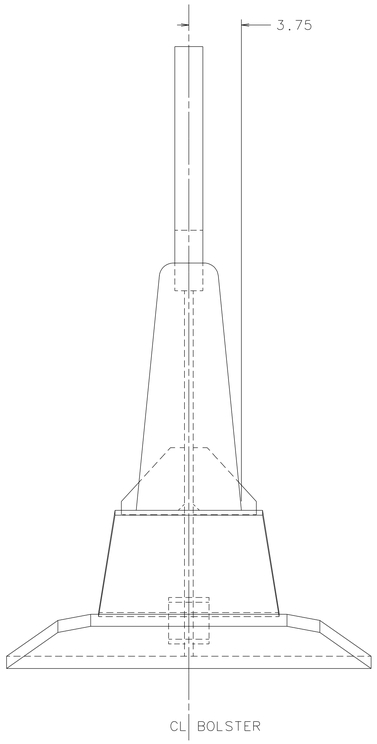

71-12389

.06

D 06-24-96 GMC KEA CORRECTED ARROW POSITION OF WELD CALLOUTS
- ------- --- --- LOT 18-12404
C 10-31-95 RVD TBB DELETED ITEM 10, 2U4375; AND NOTE 2 PER
B 11-17-94 JCC GMC REVISED FOR STANDARDIZATION

GLB 06-09-93
GMC 06-09-93
- -
SAC 6-11-93
MRW 6-11-93
JLP 6-11-93

BOLSTER ASSEMBLY

5-U-4354

1/8