REF DWG: 4-U-7631

	1	4U777300	4-U-7773-00	BRACKET-HANDBRAKE	1
	2	3U777400	3-U-7774-00	BRACKET-HANDRAIL MOUNT	2
	1	90034614		BOLT-5/8 MAGNA GRIP MGPB-R2016	3
	1	1E361502	1-E-3615-02	SUPPORT-HAND BRKT CHAIN SPRING	4
	1	2U117900	2-U-1179-00	PAD-JACKET REINF	5
	1	2U777500	2-U-7775-00	BRACKET-DIAGONAL SUPPORT	6
	1	3U320400	3-U-3204-00	BRACKET ASSY-BELLCRANK	7

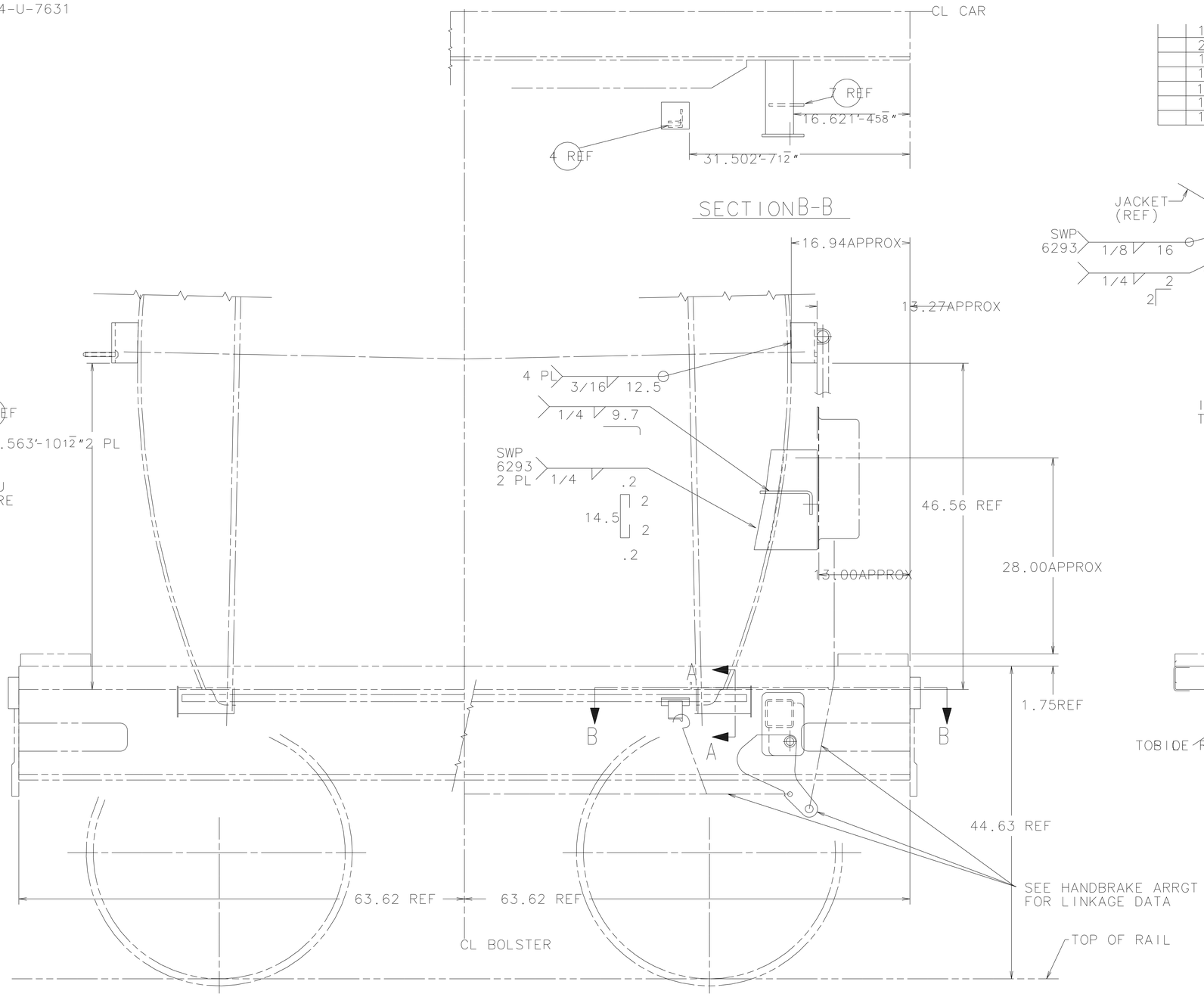

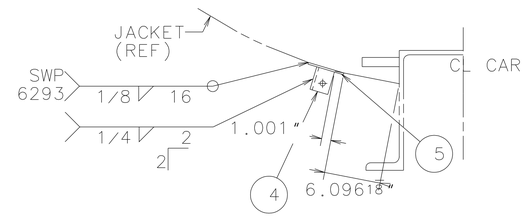

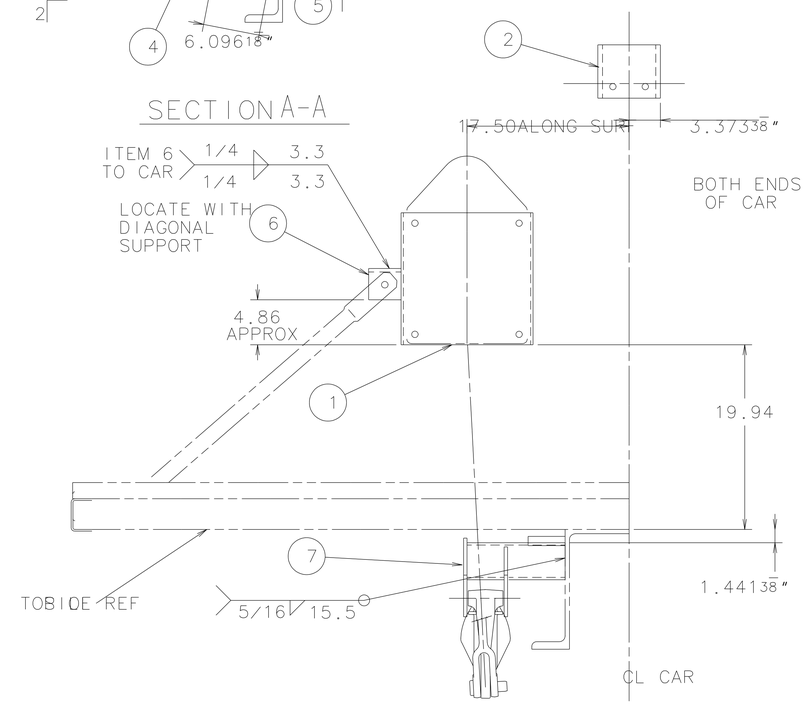

PART NO.: 4U777100

27

18-12404

.06

DGK 04-06-95
GBD 04-20-95

SAC 04-25-95
PJD 04-26-95
TBB 04-26-95

BRACKET ARRANGEMENT

4-U-7771

1/8

B 5-5-95 TBB GLB ITEM 3 QTY WAS 3, LOT 18-12404