REF DWG: 3-U-2324

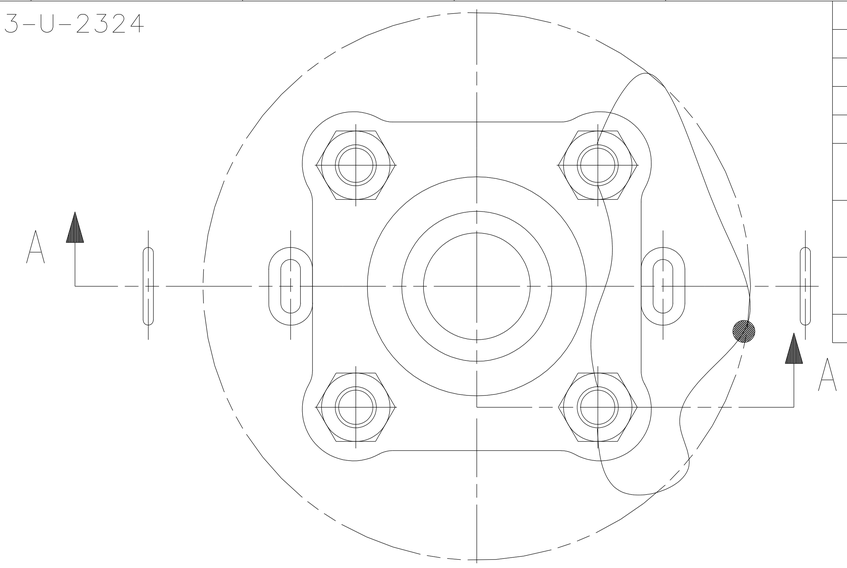

LINE NO. & QTY.					PARTS LIST				
				00	PART NO.	DWG. NO.	DESCRIPTION & MATL.	NOTE	ITEM
				2	90035043	2-U-7721-00	STUD-DOUBLE END, 3/4 X 3 1/4		1
				2	90035049	2-U-7817-00	STUD-SEAL, 3/4 X 3 1/4		2
				1	50094546		LEAD SEAL-MCMASTER CARR 2011T18		3
				4	90002212		NUT-3/4-10UNC-2B HVY HX ASTM A194 GR 2H		4
				1	90038941		GASKET-5 1/8 OD X 2 7/8 ID X 1/8 THK GARLOCK 3700		5
				1	57333952		VALVE-SAFETY, MIDLAND A-17255P, 255 LB FLAT FACE W/EPDM O-RINGS		6
				4	90006152		CHAIN-3/16 IN PROOF COIL (1 LINK)		7

NOTE:

1. APPLY A FEW DROPS OF LOCITE (STUD LOCK) TO THREADS AT INSTALLATION. APPLY TO THREADS IN STUDDING FLANGE.

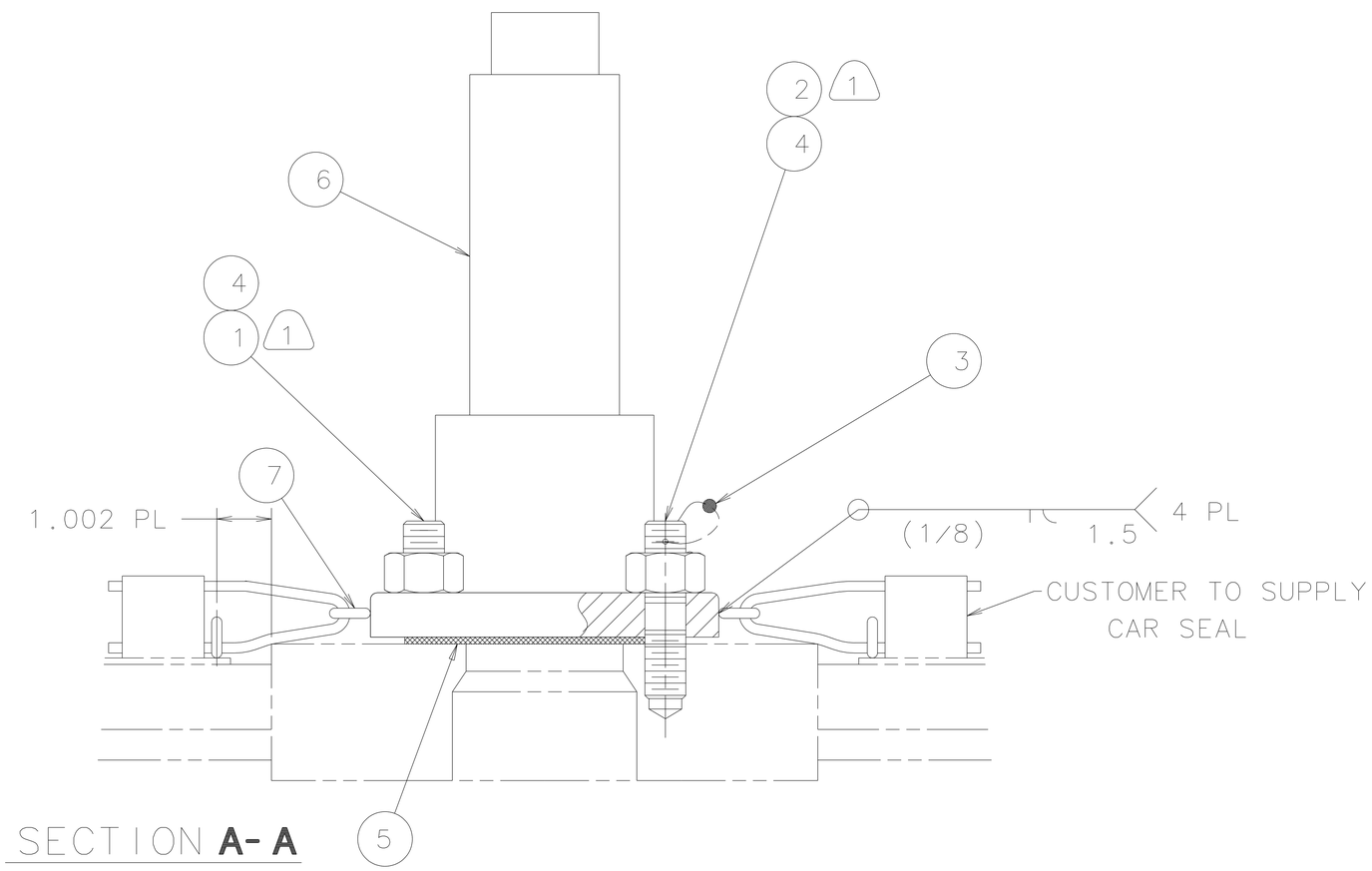

SECTION **A-A**

UNLESS OTHERWISE NOTED ALL DIMS. ARE IN INCHES.

05
CODE NO
18-12404
LOT NO

THIS DRAWING AND THE INFORMATION CONTAINED THEREIN ARE CONFIDENTIAL AND THE PROPERTY OF ACF INDUSTRIES. NO USE OR DISCLOSURE OF THE DRAWING OR INFORMATION CONTAINED THEREIN SHALL BE MADE WITHOUT PRIOR WRITTEN CONSENT OF ACF INDUSTRIES.

RV	DATE	DR	CK	DESCRIPTION
–	--------	---	---	CR 103
B	09-13-95	RVD	TBB	ITEM 5 WAS JM 986 CAT NO. 90038915 PER
A	–	–	–	ORIGINAL ISSUE

TOLERANCE UNLESS NOTED
DEC +/- .06 FRAC +/-
ANG +/-

DRAFTER	JCC	03-08-95
CHECKER	DFP	04-18-95
GROUP LDR	---	--------
APPL ENGR	SAC	04-19-95
STR ENGR	PJD	04-21-95
PROJ ENGR	TBB	04-21-95

EST WGT

ACF INDUSTRIES INCORPORATED

SAFETY VALVE ARRANGEMENT

DWG NO. 3-U-7584

SIZE C

SCALE 1/2

SHEET